HELIO-110APR(H)

10.1” Front Panel IP66 Compact Size Aluminum Die-casting Display

Features

- Industrial Fanless Display
- Flat Front Panel Touch Screen
- Gap Free Sealing and Slim Front Frame Architecture at Front Bezel
- IP66 Compliant Front Bezel
- High Brightness LCD and Auto Dimming for Option
- Wide Range DC 9~36V Power Input

Specifications

I/O Port	
VGA	1 x VGA
HDMI	1 x HDMI
DP	1 x DP
Audio	1 x line-in
OSD Control Membrane	5 Keys at rear
Power	1 x 3-pin Terminal Block Connector
Others	1 x USB type A for Touch 1 x RS-232 DB9 for Touch (option)

Dispalay	Standard	High Brightness Optional
Display Type	10.1” TFT LCD	10.1” TFT LCD
Max. Resolution	1280 x 800	1280 x 800
Max. Color	16.7M	16.2M
Luminance (cd/m^2)	350	1000
View Angle	170(H) / 170(V)	170(H) / 170(V)
Contrast	800:1	1300:1
Backlight Lifetime	30,000 hrs	50,000 hrs

Touch Screen	
Type	Resistive Touch (for AR Model) Projected Capacitive Touch (for AP Model)
Interface	USB / RS-232 option for AR model
Light Transmission(%)	Resistive Touch: 80% Projected Capacitive Touch: 90%

Power	
Power Input	DC 9~36V
Power Consumption	HELIO-110AP: 5.28W (MAX)

Mechanical	
Construction	Aluminum Die-casting Chassis
Mounting	Panel Mount / VESA Mount 100 x 100
IP Rating	IP66 Compliant Front Bezel
Dimensions (WxHxD)	269 x 189 x 51 mm
Net Weight	1.6 kg

Environmental	
Operating Temperature	0~50°C
Storage Temperature	-30~70˚C
Humidity	10 to 90% @ 40°C, Non-condensing
Certificate	CE/FCC, Class A

Dimensions

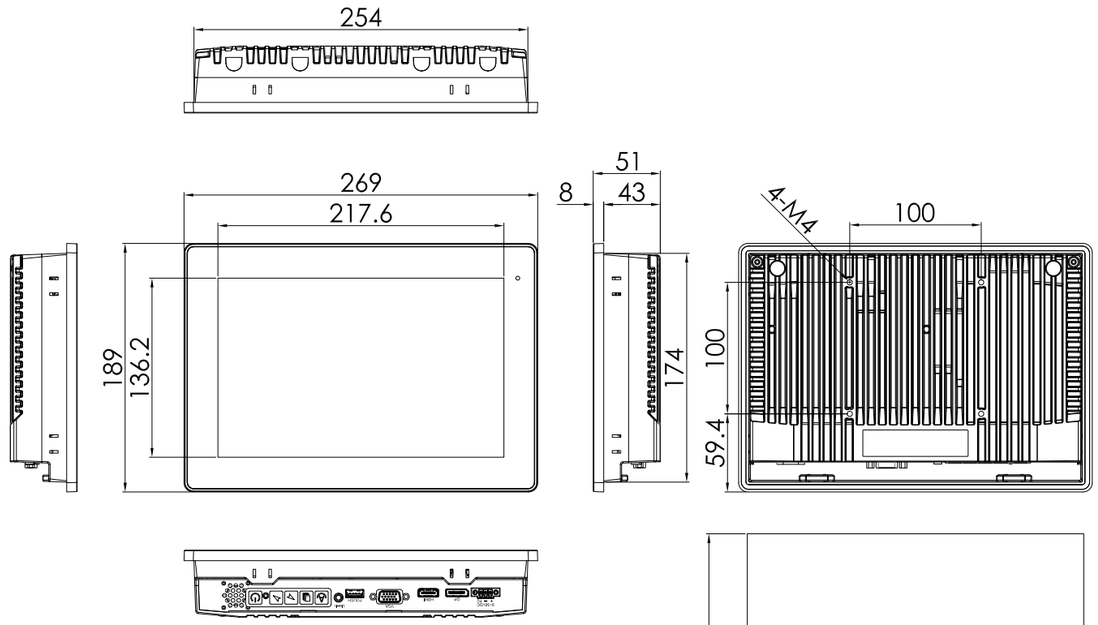

UNIT: mm
Tolerance: ±0.5

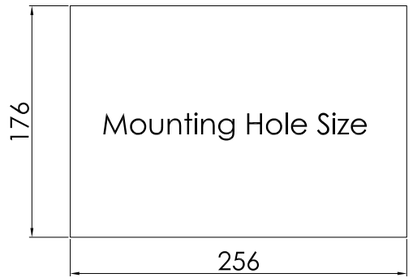

Alcom electronics
Singel 3 | B-2550 Kontich | Belgium | Tel. +32 (0)3 458 30 33
info@alcom.be | www.alcom.be
Rivium 1e straat 52 | 2909 LE Capelle aan den IJssel | The Netherlands
Tel. +31 (0)10 288 25 00 | info@alcom.nl | www.alcom.nl

V 1.0

All specifications and photos are subject to change without notice.
All specifications and photos are subject to change without notice.
Industrial Display